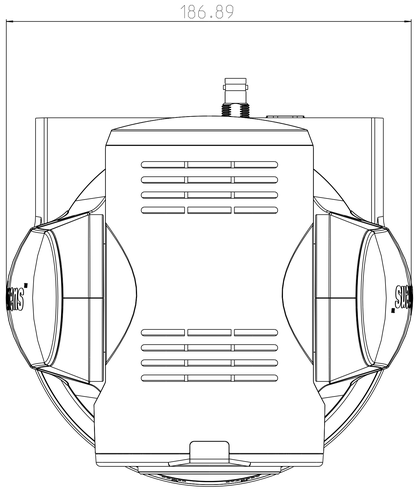
186.89

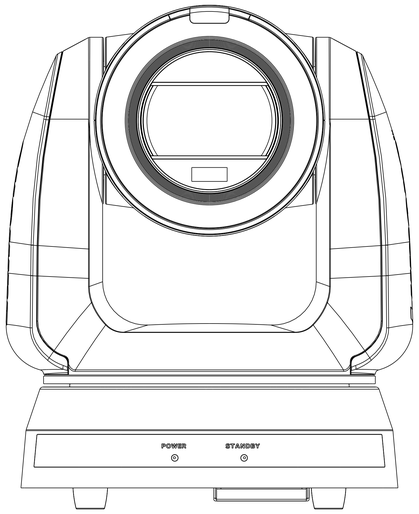
POWER
STANDBY

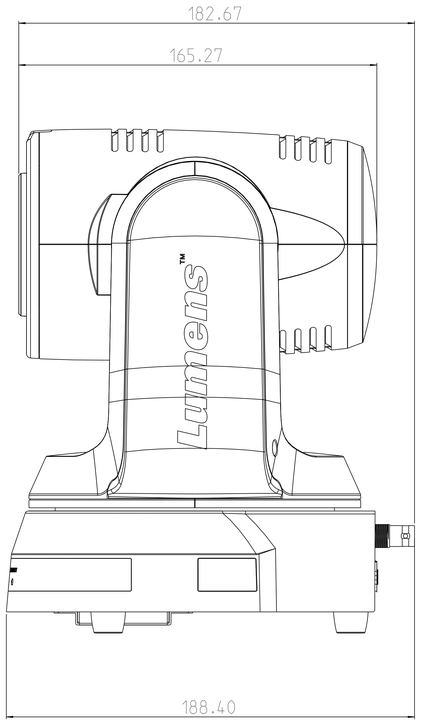
182.67
165.27
Lumens™
188.40

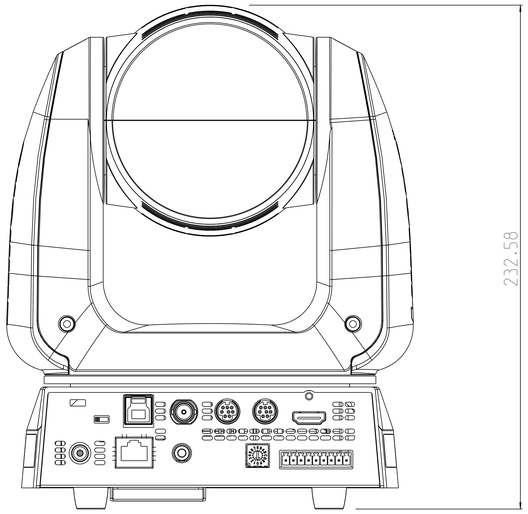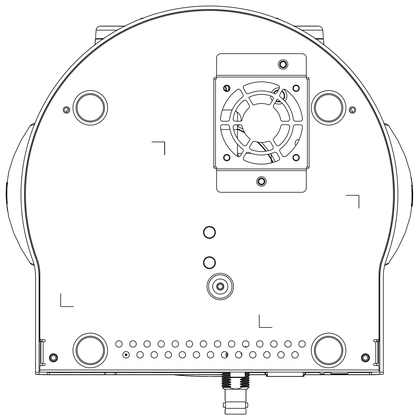
232.58